NF2 Switch-disconnector

User's Manual

0ZTD.463.1459

Zhejiang Chint Electric Co., Ltd.

2021 年 5 月

1、 Main purpose and application

NF2 series switch-disconnector (hereinafter referred to as switch), which is mainly used in electrical circuits with AC 50Hz or 60Hz, rated operational voltage up to 690V, and rated operational current up to 125A. The switch main funciton is isolaiton and breaking. It can be used to isolate failure equipment or outage maintenance. It can be used as the main switch of machine tools, fans, and pumps, and can also be used as the start-stop switch of small power motors.

Standards compliant: IEC/EN 60947-3,GB/T 14048.3

2、 Model specifications and meaning

2.1 Load switch model and meaning

N F 2 - □ / □ /□ □

- Handle color: R-Grey handle with lock; RY-Red and yellow knob; B-Black straight handle; BR- Black knob (with lock)
- Installation method:DI- Rail installation;H-Single hole panel installation; HH-Mechanical combination; DO-Door lock installation (extension rod); BO-plastic box
- Pole: 3-3P
- Conventional free air thermal current (Ith)
- Design Number
- Switch-disconnector
- Enterprise symbol

Note: 4-pole products are realized by means of 3 poles + Auxiliary Pole。

2.2 Auxiliary pole model and meaning

NF2 -□ □ □

- Installation form: N/A, DI/DO/BO; R, H
- Auxiliary pole type: PS-Sync disconnected; PD-Pre-disconnect; PN-N terminal; PE-Ground wire
- Product frame: 40-40A and below; 80-80A and below; 125-125A and below
- Product series

2.3 Auxiliary pole model and meaning

NF2 -□

- Auxiliary pole：P1-1NO+1NC；P2-2NO
- Product series

2.4 Terminal cover model and meaning

NF2 -□ □ □

- Number of poles: 3-3 poles; 1-1 pole
- Auxiliary pole type: TS-terminal cover
- Product frame: 40-40A and below; 80-80A and below; 125-125A and below
- Product series

3、Normal using, installation, transportation and storage conditions

3.1 Normal using conditions

3.1.1 Ambient air temperature: -5 ℃ ~ + 40 ℃, and the average temperature within 24h cannot exceed + 35 ℃.

3.1.2 Altitude: The altitude of the installation site cannot exceed 2000m.

3.1.3 Humidity: When the highest temperature is +40° C, the relative humidity of the air cannot exceed 50%, and higher relative humidity is allowed at lower temperatures. For example, if humidity reach 90% at 20° C, special handle should be taken for the occasional condensation due to temperature changes.

3.1.4 Pollution level: Level 3.

3.2 Installation conditions

3.2.1 Install in a place where there is no significant shaking, shock and vibration, and no rain or snow; without explosion risk; without risk of sufficient to corrode metal and damage insulation (including conductive dust);

3.2.2 Installation category: Class III.

3.3 Transport and storage conditions

3.3.1The following temperature ranges are suitable for transportation and storage: between -25° C and +55° C, and up to +70℃ in a short time (24h)

Note: When the above-mentioned normal use, installation, transportation and storage conditions are exceeded, the user should reach a special agreement with the company.

4、Main technical parameters and performance

4.1 The main parameters of the switch are shown in Table 1 and Table 2;

Table 1 Main technical parameters

model		NF2						
Frame grade		NF2-40			NF2-80		NF2-125	
Rated insulation voltage Ui (V)		800						
Rated impulse withstand voltage Uimp (kV)		8						
Conventional free air thermal current Ith (A)		25	32	40	63	80	100	125
Rated operational current Ie (A, AC-23A)	415V	25	32	40	63	80	100	125
	500V	25	25	25	63	63	80	100
	690V	25	25	25	40	40	63	63
Rated short-time withstand current Icw, 1s (kA)		1.26			1.5		2.75	
Rated short-time withstand current Icm(kA)		1.8			2.1		3.9	
Number of poles		3P、3P+N						
Wiring capacity (hard wire, cross-sectional area) (mm^2)		1.5～16			2.5～35		10～70	
Tightening torque of terminal screws (N.m)		1.2～1.4			2.5～2.8		3.5～4	
Electrical life (times)		2000						
Mechanical life (times)		100000						
Protection level		IP20, IP65（With protective shell）						

Table 2 Main technical parameters of HH mechanical assembly

model		NF2-HH (mechanical combination)								
specification		IM2 mechanical combination system: use 6-8 pole combination			IM31 mechanical interlocking structure: for 3/4 pole Ⅰ-Ⅰ+Ⅱ-Ⅱ			IM32 mechanical interlocking mechanism: used for 3/4 pole Ⅰ-0-Ⅱ conversion		
Rated insulation voltage Ui (V)		800								
Rated impulse withstand voltage Uimp (kV)		8								
Conventional free air thermal current Ith (A)		63	80	100	63	80	100	63	80	100
Rated operational current Ie (A, AC-23A)	415V	63	80	80	63	80	80	63	80	80
	500V	63	63	63	63	63	63	63	63	63
	690V	40	40	40	40	40	40	40	40	40
Rated short-time withstand current Icm(kA)		1.5								
Number of poles		6、8								
Wiring capacity (hard wire, cross-sectional area) (mm^2)		2.5～35								
Tightening torque of terminal screws (N.m)		2.5～2.8								
Electrical life (times)		2000								
Mechanical life (times)		100000								

5、Structural features and working principle

5.1 The switch is mainly composed of a handle, an operating mechanism, a contact system, a shell, and accessories. The operating mechanism adopts spring energy storage, the connection and breaking speed has nothing to do with the speed of the operating handle, ensuring the connection and breaking capacity of the product; the contact system adopts a double-breakpoint bridge structure; the wiring method adopts the wire frame method; the installation method adopts the front panel Installation (rail installation, screw installation), panel installation; the shell is made of flame-retardant reinforced polyamide material, which has good flame-retardant performance, dielectric performance and carbonization resistance.

5.2 The switch 3-pole body adds some standard accessories and can be combined into a 6/8-pole load switch or 3/4-pole transfer switch, and a neutral pole, grounding pole or auxiliary contact can also be added;

6、Shape and installation dimensions and weight

The outline and installation dimensions of the switch are shown in Figure 1 to Figure 25. See the box sticker for model specifications and weight.

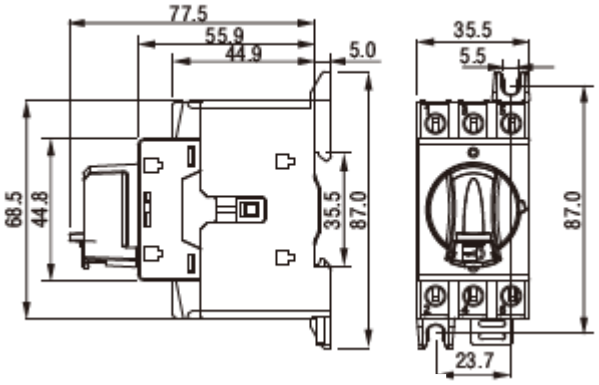

figure 1 NF2-40/DI

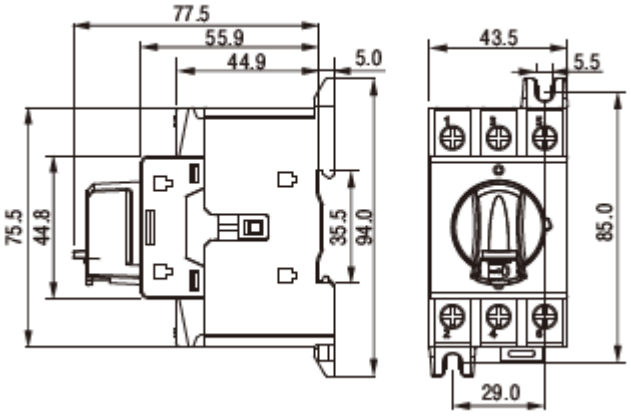

figure 2 NF2-80/DI

NF2

描
描 校
旧底图
底图总
签 字
日 期

标记	处数	更改文件号	签字	日期

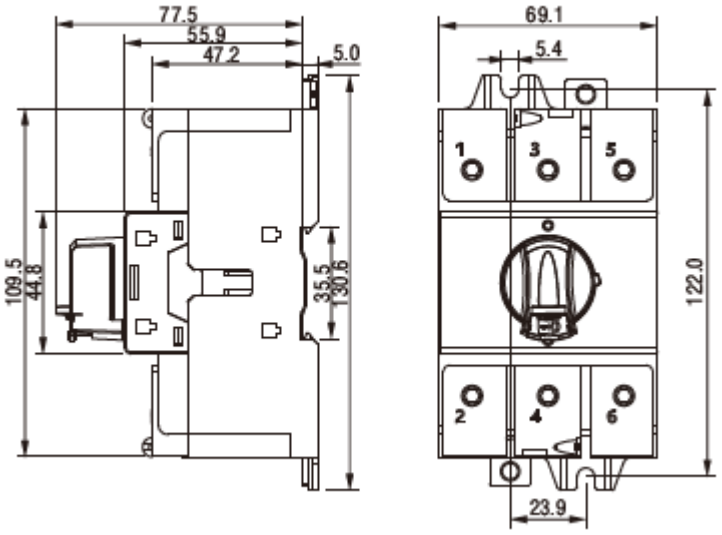

figure 3 NF2-125/DI

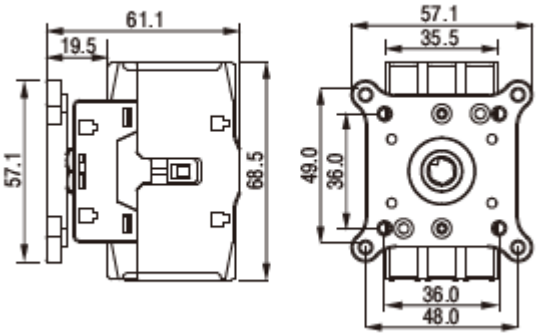

figure 4 NF2-40/H

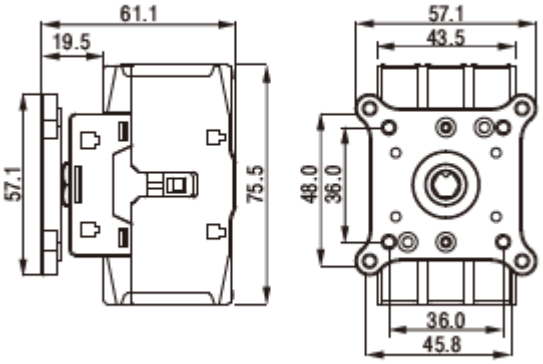

figure 5 NF2-80/H

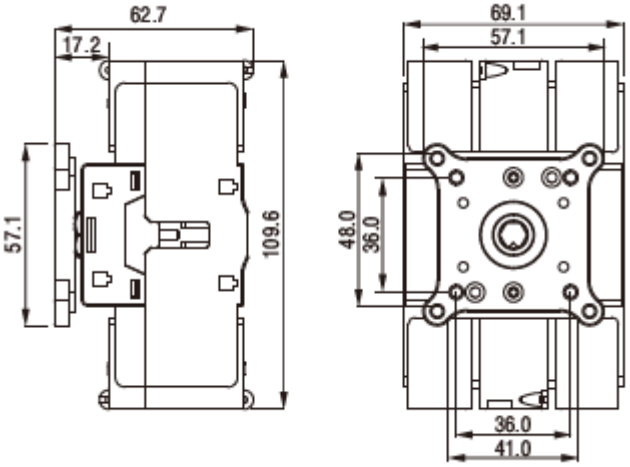

figure 6 NF2-125/H

NF2

描	
描 校	
旧底图	
底图总	
签 字	
日 期	

标记	处数	更改文件号	签字	日期										

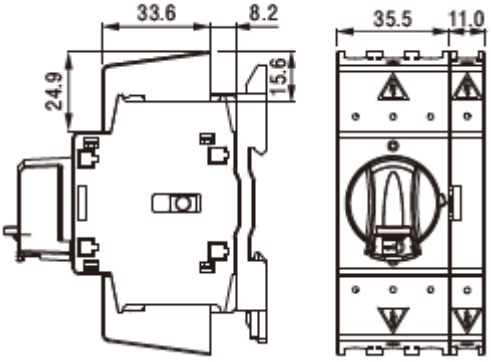

figure 7 NF2-40/TS

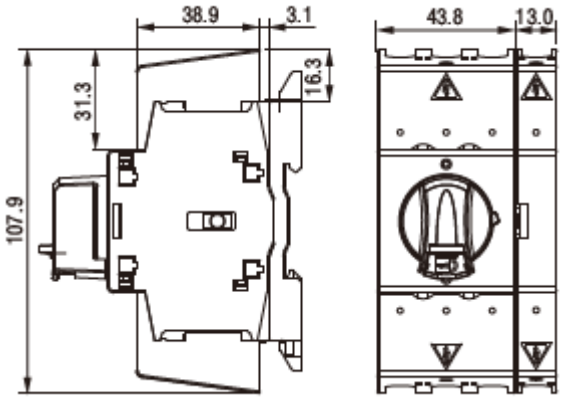

figure 8 NF2-80/TS

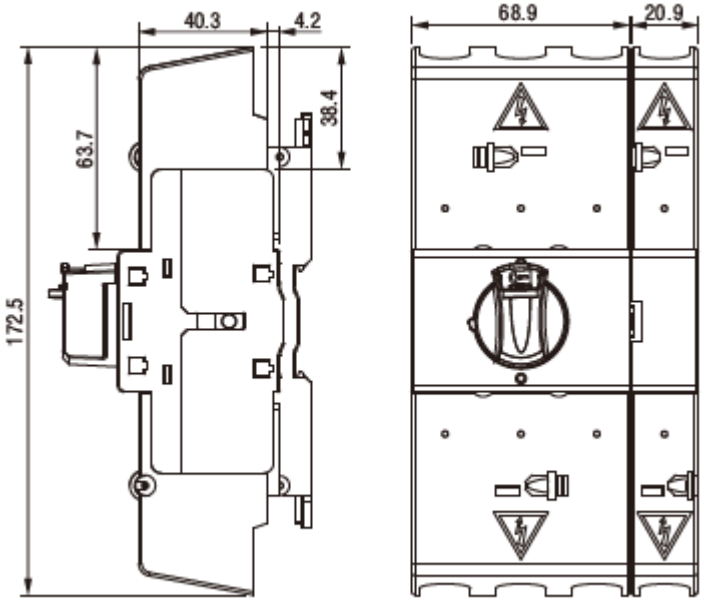

figure 9 NF2-125/TS

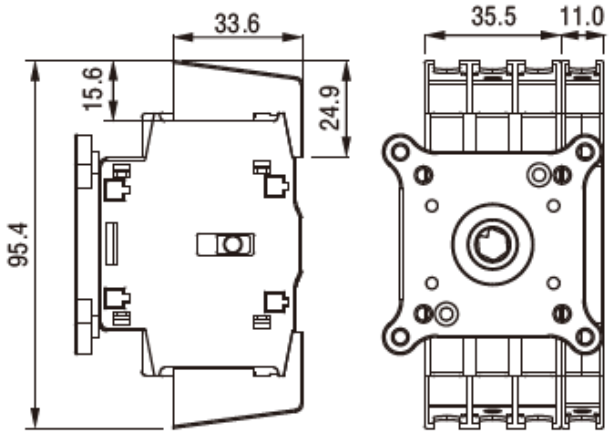

figure 10 NF2-40/HTS

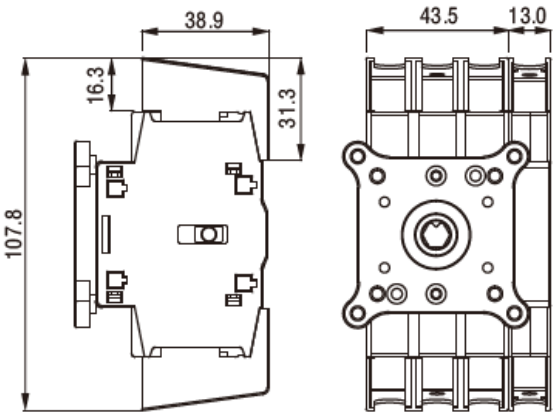

figure 11 NF2-80/HTS

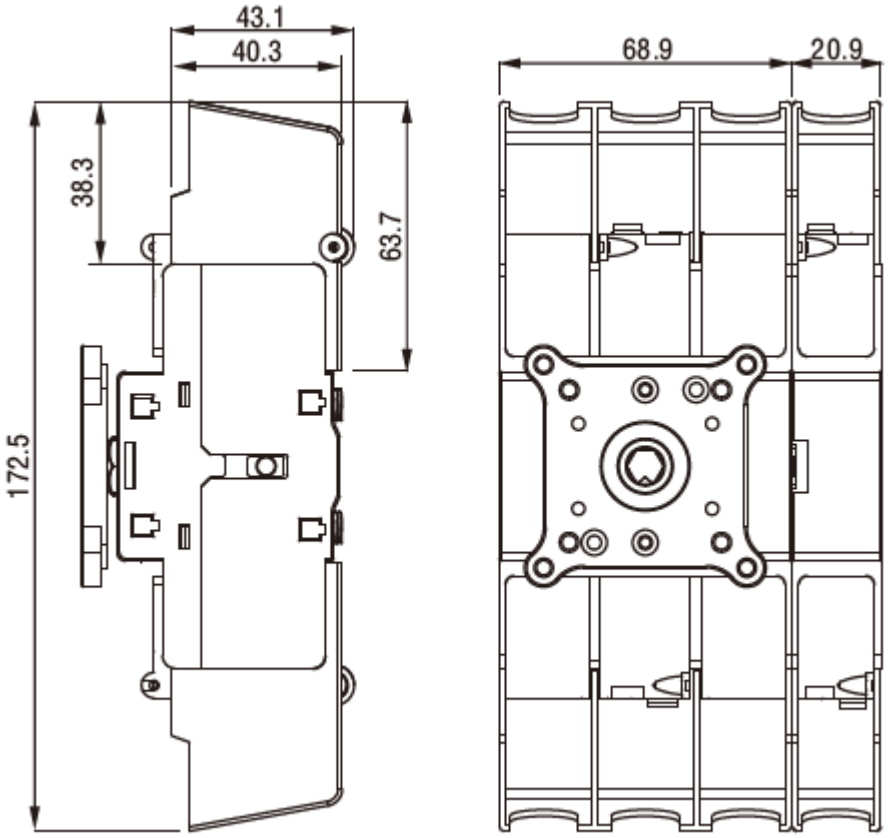

figure 12 NF2-125/HTS

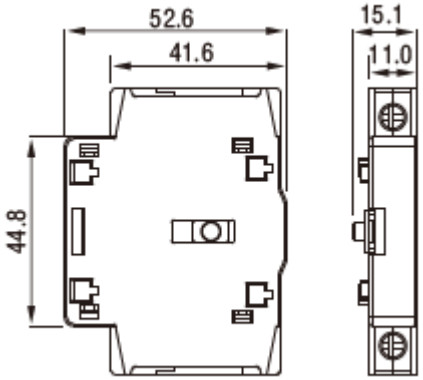

figure 13 NF2-40/PN\PS\PD\PE

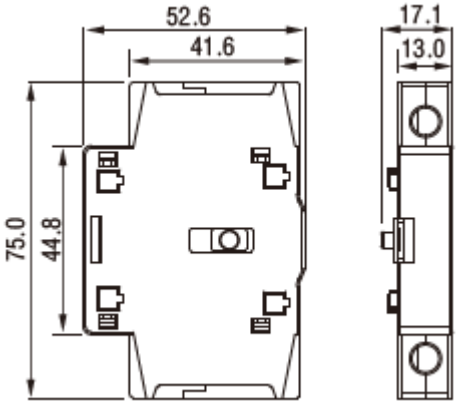

figure 14 NF2-80/PN\PS\PD\PE

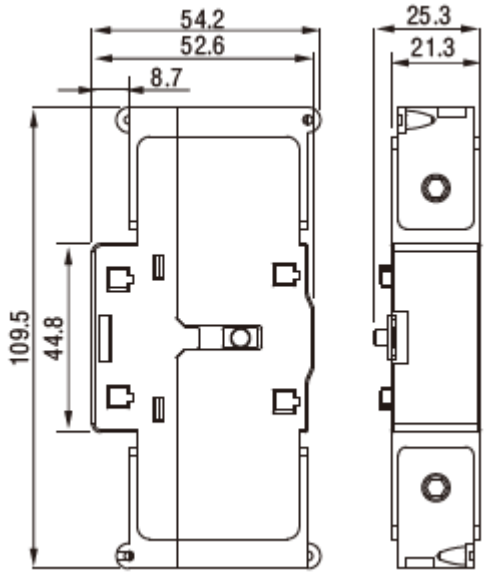

figure 15 NF2-125/
PN\PS\PD\PE

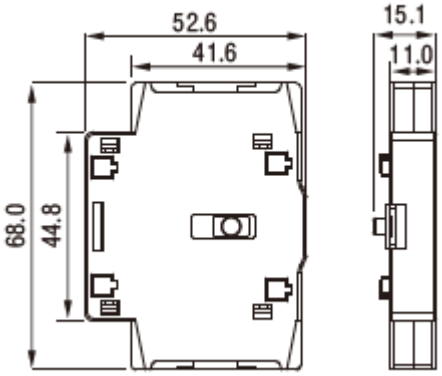

figure 16 NF2-40/
PNR\PSR\PDR\PER

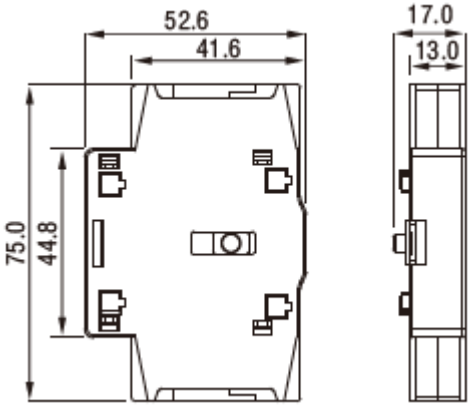

figure 17 NF2-40/
PNR\PSR\PDR\PER

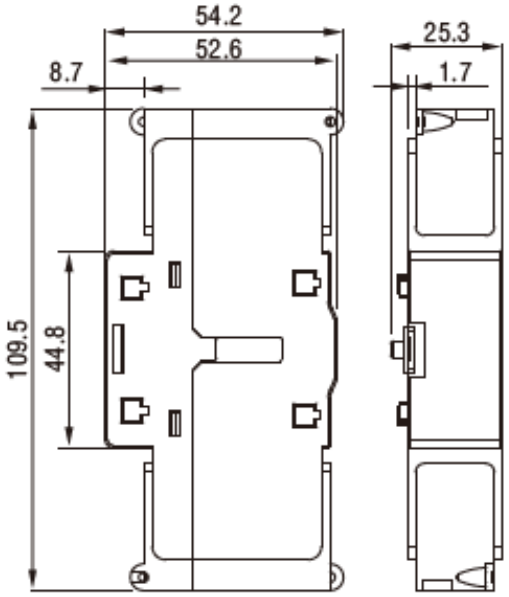

figure 18 NF2-125/
PNR\PSR\PDR\PER

NF2

描 写	
描 校	
旧底图	
底图总	
签 字	
日 期	

标记	处数	更改文件号	签字	日期										

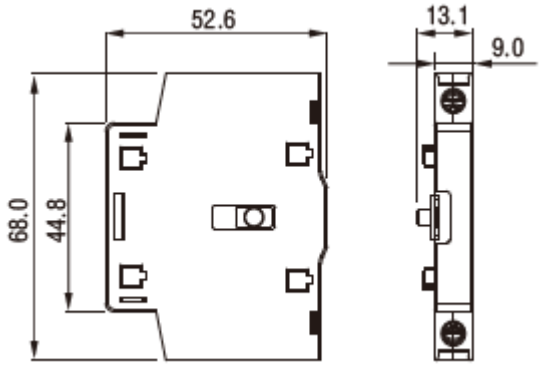

figure 19 NF2-P1、P2

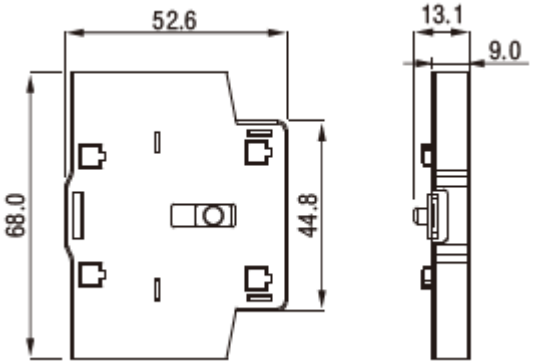

figure 20 NF2-P1R、P2R

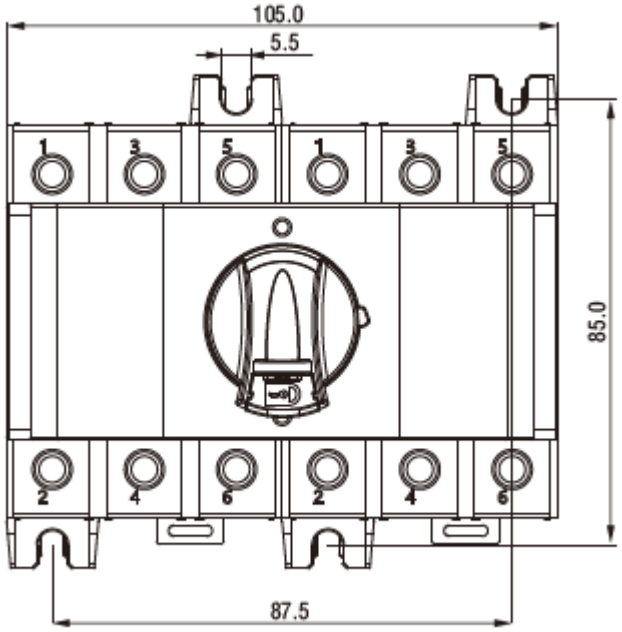

figure 21 NF2-HH

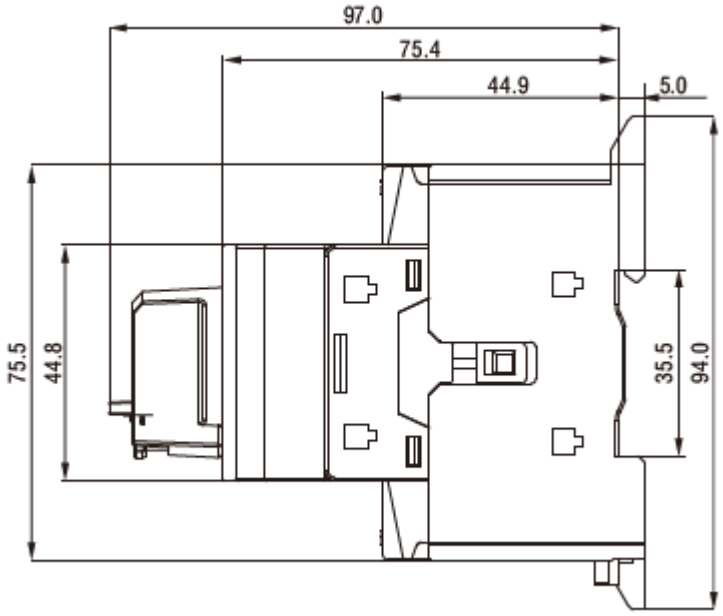

figure 22 NF2-HH

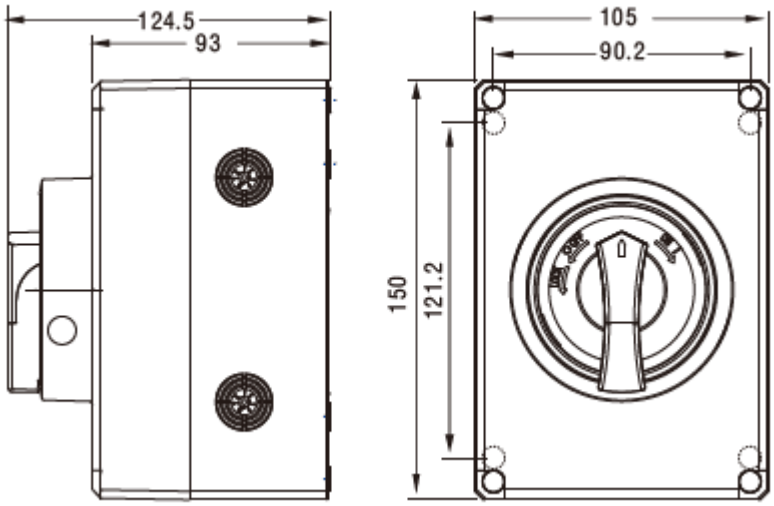

figure 23 NF2-40/BO

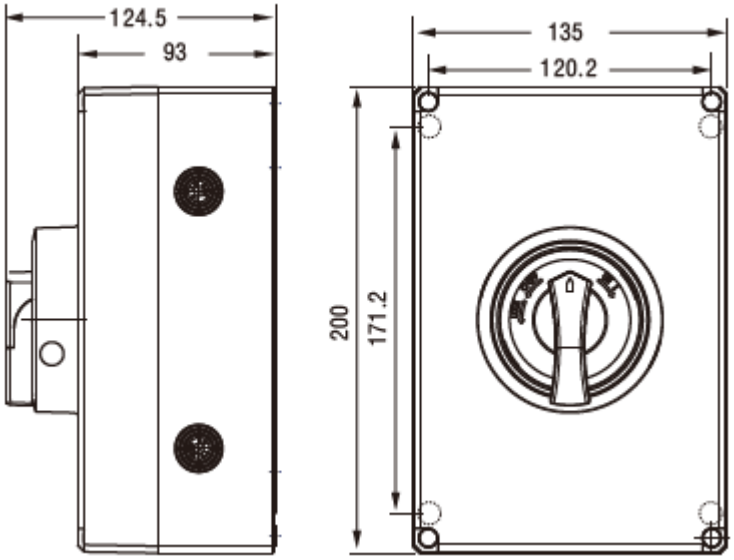

figure 24 NF2-80/BO

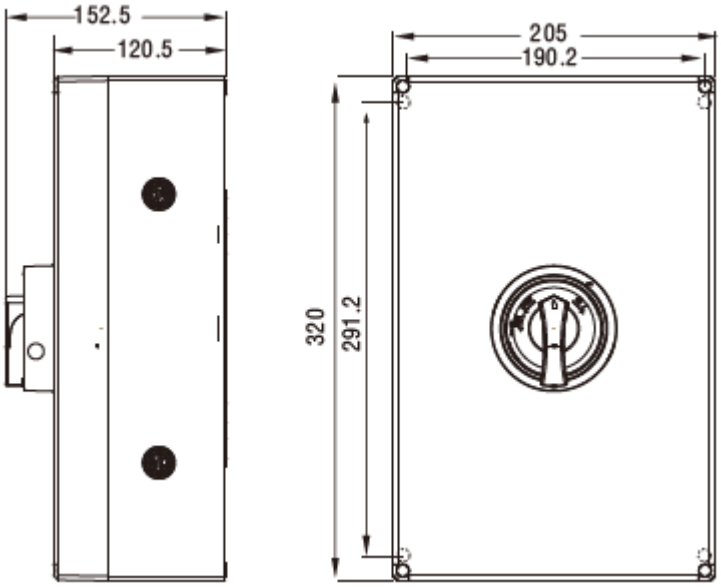

figure 25 NF2-125/BO

7、Installation, commissioning and operation

7.1 Check before installation

7.1.1 The technical data on the nameplate meets actual requirements.

7.1.2 Appearance: clean, intact parts, no loose fasteners.

7.1.3 Check the operating performance: perform 3 times of closing and opening operations, the product action is flexible and reliable; the handle points to the "ON" position, all contacts are in the on state; the handle points to the "OFF" position, and all the contacts are in the off state .

7.2 Installation method and precautions

7.2.1 Screw installation: confirm that the switch is in the off state → open a hole on the mounting plate and tap the screw → connect the switch and the mounting plate with screws and tighten

7.2.2 Guide rail installation: confirm that the switch is off → the guide rail is fixed in the cabinet → install the switch as shown in Figure 26

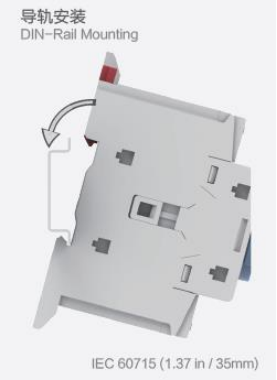

Figure 26 Guide rail installation sketch

7.2.3 Panel installation: confirm that the switch is in the off state → the mounting plate is open → the screw assembly connects the body, the installation panel and the installation plate → the name plate → the cover → the handle → tighten the screw. As shown in Figure 27

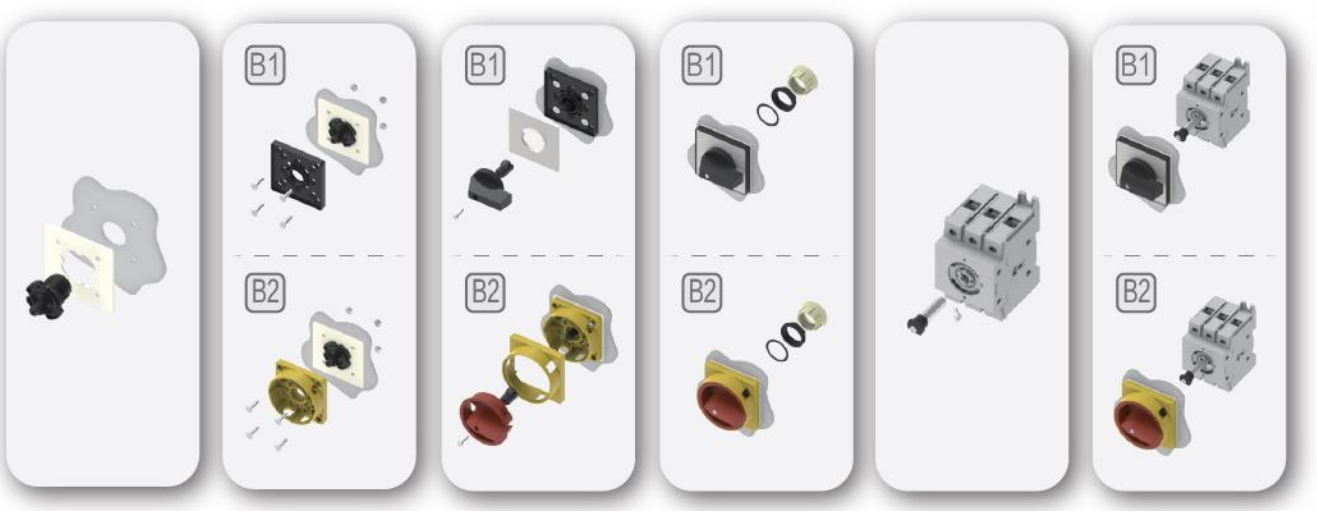

Figure 27 Panel installation sketch

7.2.4 Terminal cover and lock installation: as shown in Figure 28, 29

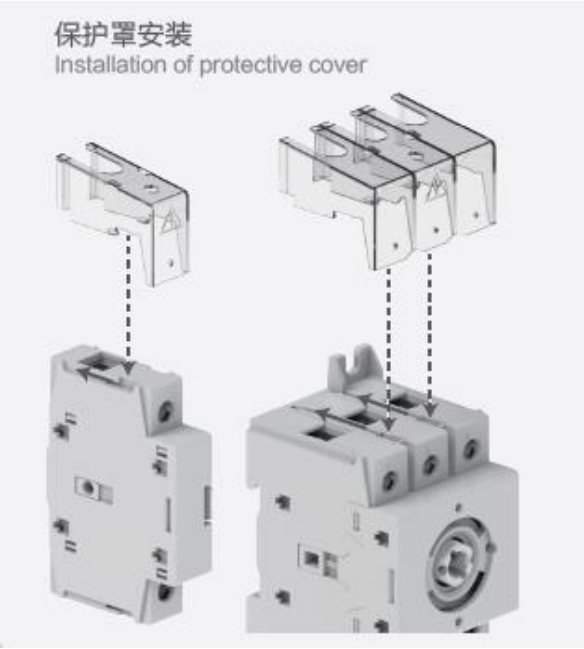

Figure 28 Installation diagram of terminal cover

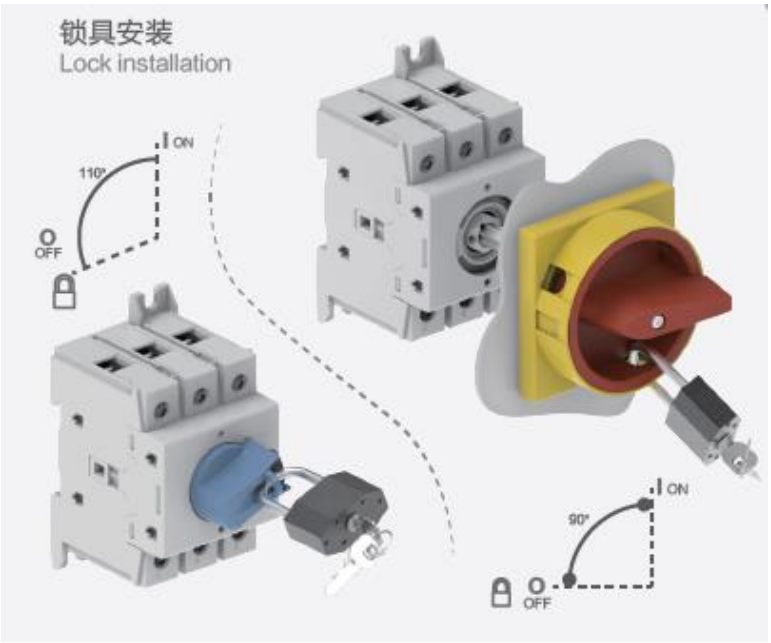

Figure 29: Schematic diagram of lock installation

7.2.5 Additional auxiliary contact/additional fourth pole installation: as shown in Figure 30, 31

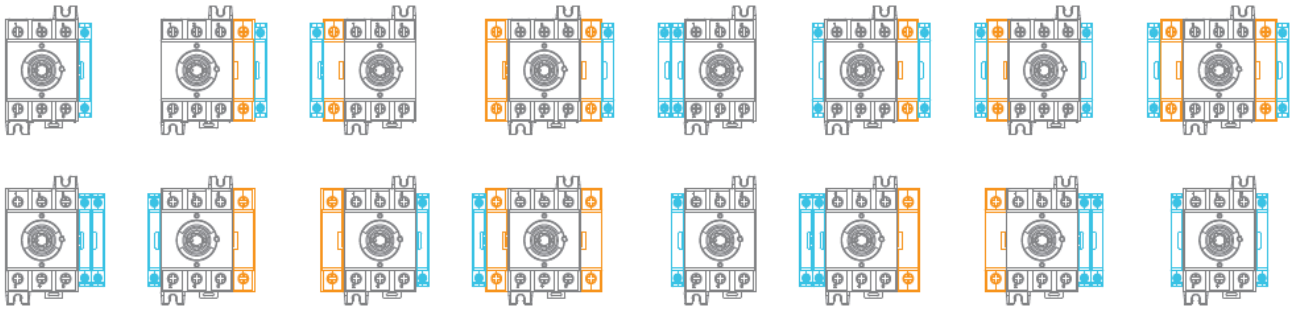

Figure 30 Schematic diagram of accessory pole/auxiliary contact matching

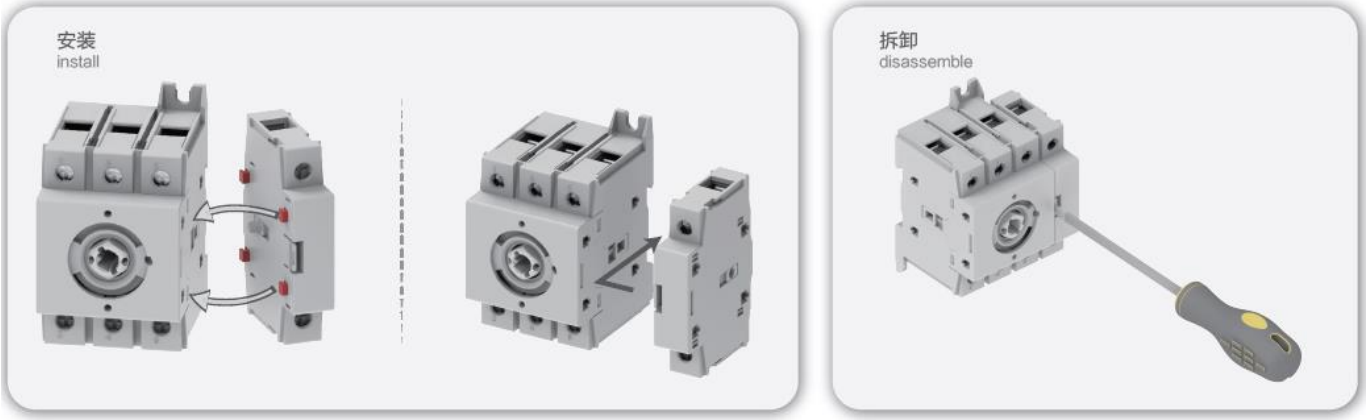

Figure 31 Schematic diagram of attachment pole installation

8、Precautions for maintenance, maintenance and storage period

8.1 Daily maintenance

Take appropriate measures to remove dust, water vapor, conductive dust and corrosive substances. Non-professionals of the company are not allowed to disassemble and repair.

8.2 Maintenance and maintenance during operation

8.2.1 Confirm that the wiring terminals are in good contact, there is no looseness, and the wire connection is reliable.

8.2.2 During use, all parts of the product should be checked frequently to ensure that no moving parts are stuck and fasteners are not loosened to ensure safety and reliability. If the parts are damaged, they should be replaced in time.

8.3 Maintenance cycle

It is recommended to check and maintain it once a month.

8.4 Long-term use and storage period

The product should be disconnected when not in use, and should be stored in a ventilated, dry, non-corrosive gas warehouse. The product or packaging should not be placed directly on the ground to avoid damage.

9、Warranty period and environmental protection and other legal regulations

10.1 Warranty period

Under normal storage and transportation conditions, the product packaging or the product itself is intact, and the product has a warranty period of 24 months from the date of production. The following conditions are not covered by the warranty:

1) Damage caused by improper use, storage and maintenance by the user.

2) Damage caused by the organization or personnel not designated by the company, or the user's disassembly, assembly and maintenance.

3) The product has exceeded the warranty period.

4) Damage caused by force majeure.

10.2 Environmental protection

In order to protect the environment, when this product or its components are scrapped, please dispose of them properly as industrial waste; or hand them to a recycling station for classification, disassembly, recycling, etc. in accordance with relevant national regulations.

10、 Ordering instructions

10.1 State the model, number, delivery time, place, unit and consignee when ordering;

10.2 Order example: NF2-25/3HRY 10 units. NF2-25 3-pole single-hole panel mounting 10 sets of red and yellow knobs.

10.2.1 If you need to order a 4-pole product, it should include the main body + additional poles: such as NF2-25/3DIR 10 sets + NF2-40PS 10 sets. NF2-25 3-pole guide rail installation Blue knob 10 sets +40 frame frame Synchronously disconnect 10 sets of additional poles.

10.2.3 If you need to order a 4-pole product + auxiliary, it should include the main body + additional pole + auxiliary pole: such as NF2-32/3DOB 10 sets + NF2-40PD 10 sets + NF2-P1 10 sets. NF2-25 3-pole door lock installation Black straight handle 10 sets +40 shell frame 10 sets of pre-disconnected additional poles + 10 sets of NO1NC auxiliary.

使用说明书附件

附件1（关于封面的内容）

关于封面的印刷技术内容要求见下表：

序号	印刷内容项	印刷内容	要求说明
1	商标	CHINT 正泰	由品牌管理部统一设计
2	正泰文化元素	闪电符号	由品牌管理部统一设计
3	产品系列型号（或含规格）	NF2	告知用户产品系列型号、规格识别信息
4	产品名称	负荷开关	告知用户产品名称识别信息
5	标题	使用说明书	按统一规定
6	温馨提示语	感谢您选购本产品，在安装、使用或维护产品前，请仔细阅读使用说明书。	引导用户阅读并保存好使用说明书
7	符合标准	IEC/EN 60947-3 GB/T 14048.3	明示产品所符合的标准，内销产品仅标识国标、行标、团体标准或产品企业标准；出口产品仅标识国际标准或出口国标准
8	版本号	2021 年 5 月版	明示使用说明书的版本，如：“2018 年 5 月版”
9	管理体系认证	按统一规定	按统一规定
10	产品二维码	/	用于产品的信息化管理，或引导用户查阅产品电子版相关技术信息，根据产品实际维护情况标识

附件2　安全警示（印刷在封面的背页首要位置）

关于安全注意事项的印刷内容如下：

1）产品严禁安装于含有易燃易爆气体、潮湿凝露的环境中，严禁用湿手操作产品。
2）产品工作中，严禁触摸产品导电部位。
3）维修与保养产品时，必须确保产品断电。
4）严禁小孩玩耍产品或包装物。
5）产品安装周围应保留足够空间和安全距离。
6）不要安装在气体介质能腐蚀金属和破坏绝缘的地方。
7）产品在安装使用时，必须应用标配导线并配接符合要求的电源与负载。
8）为避免危险事故，产品的安装固定必须严格按照说明书的要求进行。
9）在拆除包装后，应检查产品有无损坏，并清点物品的完整性。
10）安装、维护与保养时，应由具有专业资质的人员操作。
11）注意定期紧固接线端子螺钉或螺栓，并清除产品上沉积的灰尘。
12）应防止异物落入产品内。

附件3（关于产品合格证的内容）

关于产品合格证的印刷技术内容如下表：

序号	技术内容项	印刷内容	解释说明
1	商标	CHINT 正泰	由品牌管理部统一设计
2	标题	合格证	由品牌管理部统一设计
3	产品名称	负荷开关	按产品使用说明书实际所涵盖产品系列型号
4	产品系列型号	NF2	按产品使用说明书实际适用产品名称
5	“产品经检验合格，符合标准 GB/T XXXX-20XX，准予出厂”	产品经检验合格，符合标准 GB/T 14048.4，准予出厂。	按产品使用说明书实际适用产品所符合标准
6	检验员编号	检 07	按产品成品实际检验员工号
7	检验日期	见产品或包装	按统一规定
8	公司名称	浙江正泰电器股份有限公司	按公司统一规定

附件4（关于封底的内容）

关于封底的印刷技术内容要求见下表：

序号	印刷内容项	印刷内容	要求说明
1	商标	CHINT 正泰	由品牌管理部统一设计
2	正泰文化元素		由品牌管理部统一设计
3	温馨提示语	产品若有技术改进，会编进新版说明书中，不再另行通知。	按统一规定
4	扩展信息粘贴区域	按统一规定	由品牌管理部统一设计
5	企业二维码	按统一规定	按统一规定
6	回收标志或禁止随意废弃标志		
7	生产者（制造商）名称、地址	按统一规定	按公司统一规定的含通讯信息，如邮编、电话、传真、客服热线、网址等

附件5　说明书的幅面尺寸、印刷色彩、装订形式、制作材质的要求：

关于说明书的幅面尺寸、印刷色彩、装订形式、制作材质的要求如下：

序号	项目	要求	要求说明
1	幅面尺寸	正64开（92X130）	分为正16开（185X260）、正32开（130X185）、正64开（92X130）、正128开（65X92）等四种可选
2	印刷色彩	全彩印刷	分为封面彩印内页黑白、全黑白印刷、全彩印等三种可选
3	装订形式	单张折叠	分为线装本、订装本、胶装本、单张折叠本等四种可选
4	制作材质	60g/m^{2}双胶纸	对产品使用说明书制作的纸张材质进行规定