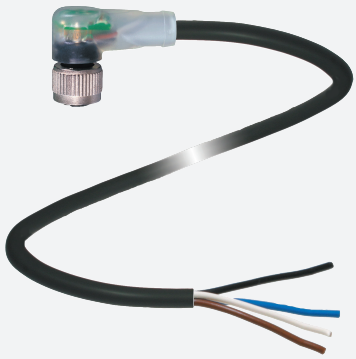

# Female cordset

## V1-W-A2-BK5M-PUR-U

- Built-in LED, as operating and function indicator
- Suitable for drag chains and abrasion resistant
- Suitable for robotic applications / torsion resistant
- Degree of protection IP67 / IP68 / IP69
- Free from substances that impair paint wetting
- Resistant to microbes and hydrolysis
- UV resistant
- cURus approval
- Halogen-free
- Knurled nut suitable for tool assembly
- Immunity to vibration, with mechanical latching

Female cordset single-ended M12 angled A-coded, LED 4-pin, PUR cable black, UL approved, drag chain suitable, torsion resistant

## Dimensions

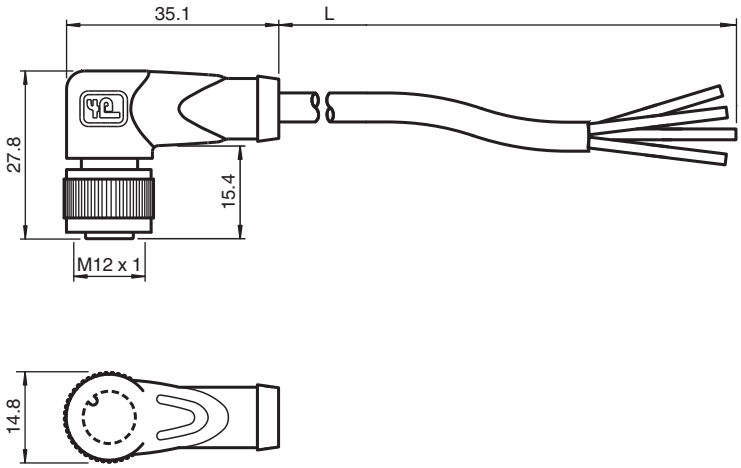


## Technical Data

| | | |
|---|---|---|
| **General specifications** | | |
| Connector 1 | | |
| Connection | | socket |
| Construction type | | M12 |
| Style | | angled |
| Locking | | screw connection |
| Number of pins | | 4 |
| Coding | | A-coded |
| Connector 2 | | |
| Connection | | cable end |
| **Indicators/operating means** | | |
| LED green | | Operating display |
| LED yellow | | Functional display pin 4 |
| **Electrical specifications** | | |
| Operating voltage | $U_B$ | max. 24 V DC -20 % / +25 % |

Release date: 2020-12-21 Date of issue: 2020-12-21 Filename: 217487_eng.pdf

## Technical Data

| | | |
|---|---|---|
| Operating current | $I_B$ | max. 4 A |
| **Conformity** | | |
| Degree of protection | | EN 60529 |
| Plug connection | | connector M12 x 1 : IEC 61076-2-101 |
| Flammability | | UL 1581; DIN EN 60332-2-2 |
| Halogen-free | | IEC 60754-1 |
| **Approvals and certificates** | | |
| UL approval | | AWM STYLE 20549 AWM I/II A/B 80°C 300V FT2 (cable) |
| **Ambient conditions** | | |
| Ambient temperature | | |
| Plug connector | | -40 ... 90 °C (-40 ... 194 °F) |
| Cable, fixed | | -40 ... 80 °C (-40 ... 176 °F) |
| Cable, flexing | | -20 ... 80 °C (-4 ... 176 °F) |
| Pollution degree | | 3 |
| **Mechanical specifications** | | |
| Plug connector | | |
| Tightening torque | | 0.6 Nm |
| Loosening protection | | available |
| Tool installation | | straight knurling |
| Mating cycles | | min. 100 |
| Degree of protection | | IP67 / IP68 / IP69 |
| Cable | | according to IEC/EN 60228 (DIN VDE 0295) class 6 |
| Sheath diameter | | 4.3 mm |
| Bending radius | | > 10 x cable diameter, moving<br>> 5 x cable diameter, fixed |
| Sheath stripping force | | max. 80 N / 300 mm |
| Sheath color | | black (similar to RAL 9005) |
| Number of cores | | 4 |
| Core cross-section | | 0.34 $mm^2$ |
| Cores color | | Core 1: brown<br>Core 2: white<br>Core 3: blue<br>Core 4: black |
| Core construction | | 42 x 0.1 mm Ø |
| Length | L | 5 m |
| Cable code | | Li 9Y 11Y 4 x 0.34 |
| Drag chain suitability | | |
| Drag chain cycles | | min. 5000000 |
| Motion velocity | | max. 3.3 m/s |
| Traverse distance | | max. 5 m |
| Acceleration | | max. 5 $m/s^2$ |
| Torsion cycles | | min. 1000000 |
| Torsional stress | | ± 180 °/m |
| **Material** | | |
| LABS free | | yes |
| Halogen-free | | yes |
| Plug connector | | |
| Knurled screw connection | | Zinc diecast, nickel-plated |
| Body | | TPU, transparent |
| Contact surface | | Au |
| Flammability | | V-2 |
| Cable | | |
| Sheathing | | PUR based on polyether |
| Core insulation | | PP |

Release date: 2020-12-21 Date of issue: 2020-12-21 Filename: 217487_eng.pdf

## Technical Data

| | |
|---|---|
| UV resistance | yes |
| Chemical resistance | good |
| Oil resistance | yes |
| Cooling lubricant resistance | yes |
| Microbial resistance | yes |
| Hydrolysis resistance | yes |
| Flammability | FT2 |

## Connection Assignment

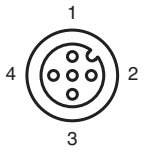


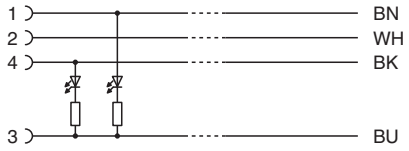


Release date: 2020-12-21 Date of issue: 2020-12-21 Filename: 217487_eng.pdf