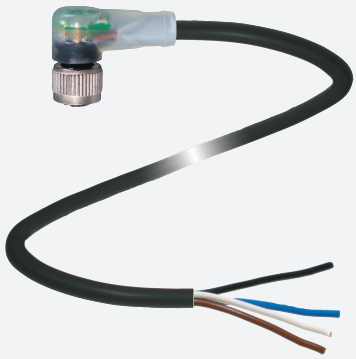

Female cordset

V1-W-A2-BK10M-PUR-U

- Built-in LED, as operating and function indicator
- Suitable for drag chains and abrasion resistant
- Suitable for robotic applications / torsion resistant
- Degree of protection IP67 / IP68 / IP69
- Free from substances that impair paint wetting
- Resistant to microbes and hydrolysis
- UV resistant
- cURus approval
- Halogen-free
- Knurled nut suitable for tool assembly
- Immunity to vibration, with mechanical latching

Female cordset single-ended M12 angled A-coded, LED 4-pin, PUR cable black, UL approved, drag chain suitable, torsion resistant

Dimensions

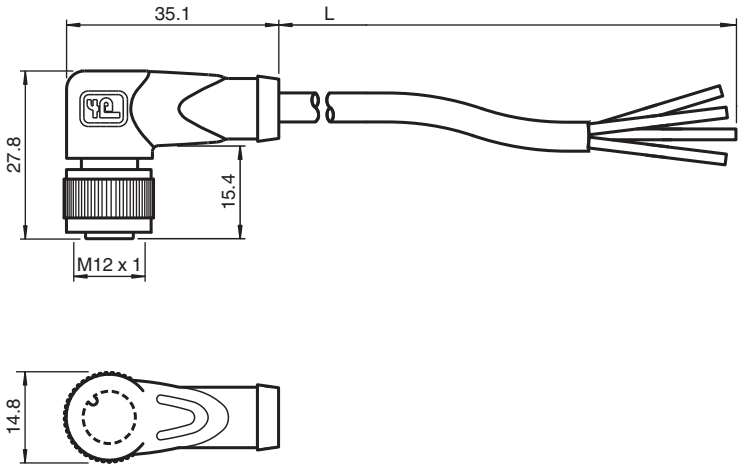

Technical Data

General specifications		
Connector 1		
Connection		socket
Construction type		M12
Style		angled
Locking		screw connection
Number of pins		4
Coding		A-coded
Connector 2		
Connection		cable end
Indicators/operating means		
LED green		Operating display
LED yellow		Functional display pin 4
Electrical specifications		
Operating voltage	U_B	max. 24 V DC -20 % / +25 %

Release date: 2020-12-21 Date of issue: 2020-12-21 Filename: 217488_eng.pdf

Technical Data

Operating current	I_B	max. 4 A
Conformity		
Degree of protection		EN 60529
Plug connection		connector M12 x 1 : IEC 61076-2-101
Flammability		UL 1581; DIN EN 60332-2-2
Halogen-free		IEC 60754-1
Approvals and certificates		
UL approval		AWM STYLE 20549 AWM I/II A/B 80°C 300V FT2 (cable)
Ambient conditions		
Ambient temperature		
Plug connector		-40 ... 90 °C (-40 ... 194 °F)
Cable, fixed		-40 ... 80 °C (-40 ... 176 °F)
Cable, flexing		-20 ... 80 °C (-4 ... 176 °F)
Pollution degree		3
Mechanical specifications		
Plug connector		
Tightening torque		0.6 Nm
Loosening protection		available
Tool installation		straight knurling
Mating cycles		min. 100
Degree of protection		IP67 / IP68 / IP69
Cable		according to IEC/EN 60228 (DIN VDE 0295) class 6
Sheath diameter		4.3 mm
Bending radius		> 10 x cable diameter, moving > 5 x cable diameter, fixed
Sheath stripping force		max. 80 N / 300 mm
Sheath color		black (similar to RAL 9005)
Number of cores		4
Core cross-section		0.34 mm^2
Cores color		Core 1: brown Core 2: white Core 3: blue Core 4: black
Core construction		42 x 0.1 mm Ø
Length	L	10 m
Cable code		Li 9Y 11Y 4 x 0.34
Drag chain suitability		
Drag chain cycles		min. 5000000
Motion velocity		max. 3.3 m/s
Traverse distance		max. 5 m
Acceleration		max. 5 m/s^2
Torsion cycles		min. 1000000
Torsional stress		± 180 °/m
Material		
LABS free		yes
Halogen-free		yes
Plug connector		
Knurled screw connection		Zinc diecast, nickel-plated
Body		TPU, transparent
Contact surface		Au
Flammability		V-2
Cable		
Sheathing		PUR based on polyether
Core insulation		PP

Release date: 2020-12-21 Date of issue: 2020-12-21 Filename: 217488_eng.pdf

Technical Data

UV resistance	yes
Chemical resistance	good
Oil resistance	yes
Cooling lubricant resistance	yes
Microbial resistance	yes
Hydrolysis resistance	yes
Flammability	FT2

Connection Assignment

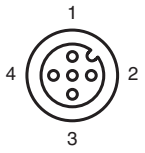

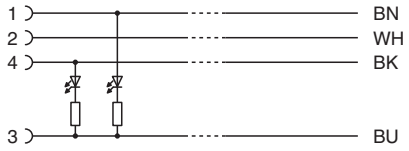

Release date: 2020-12-21 Date of issue: 2020-12-21 Filename: 217488_eng.pdf