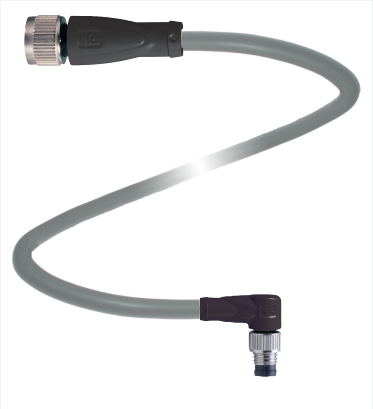

Connection cable

V1-G-2M-PUR-V31-WM

- Degree of protection IP67
- Resistant to microbes and hydrolysis
- Halogen-free
- Knurled nut suitable for tool assembly
- Immunity to vibration, with mechanical latching

Cordset M8 socket straight to M12 plug gewinkelt A-coded, 4-pin, PUR cable grey

Dimensions

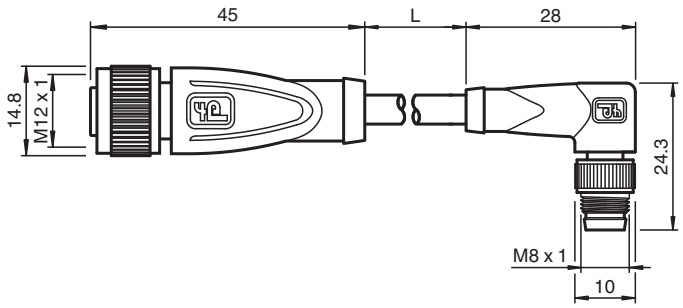

Technical Data

General specifications		
Connector 1		
Connection		socket
Construction type		M12
Style		straight
Locking		screw connection
Number of pins		4
Coding		A-coded
Connector 2		
Connection		plug
Construction type		M8
Style		angled
Locking		screw connection
Number of pins		4
Coding		A-coded
Electrical specifications		
Operating voltage	U_B	max. 30 V AC/DC

Release date: 2021-06-01 Date of issue: 2021-06-01 Filename: 221134_eng.pdf

Technical Data

Operating current	I_B	max. 3 A
Conformity		
Degree of protection		EN 60529
Plug connection		connector M8 x 1 : IEC 61076-2-104 connector M12 x 1 : IEC 61076-2-101
Halogen-free		IEC 60754-1
Ambient conditions		
Ambient temperature		
Plug connector		-40 ... 90 °C (-40 ... 194 °F)
Cable, fixed		-40 ... 80 °C (-40 ... 176 °F)
Cable, flexing		-20 ... 80 °C (-4 ... 176 °F)
Pollution degree		3
Mechanical specifications		
Connector 1		
Tightening torque		0.6 Nm
Loosening protection		available
Tool installation		straight knurling
Mating cycles		min. 100
Degree of protection		IP67 / IP68 / IP69
Connector 2		
Tightening torque		0.4 Nm
Loosening protection		available
Tool installation		straight knurling
Mating cycles		min. 100
Degree of protection		IP67
Cable		according to IEC/EN 60228 (DIN VDE 0295) class 5
Sheath diameter		4.3 mm
Bending radius		> 15 x cable diameter, moving > 8 x cable diameter, fixed
Sheath stripping force		max. 60 N / 500 mm
Sheath color		grey (similar to RAL 7001)
Number of cores		4
Core cross-section		0.25 mm^2
Cores color		Core 1: brown Core 2: white Core 3: blue Core 4: black
Core construction		14 x 0.15 mm Ø
Length	L	2 m
Cable code		Li 9Y 11Y 4 x 0,25
Drag chain suitability		
Drag chain cycles		max. 50 / day
Motion velocity		max. 0.3 m/s
Material		
Halogen-free		yes
Plug connector		
Screw connection		Zinc diecast, nickel-plated
Body		TPU, black
Contact surface		Au
Flammability		V-2
Cable		
Sheathing		PUR based on polyether
Core insulation		PP
Chemical resistance		good
Microbial resistance		yes

Release date: 2021-06-01 Date of issue: 2021-06-01 Filename: 221134_eng.pdf

Technical Data

Hydrolysis resistance	yes

Connection Assignment

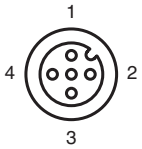

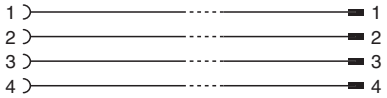

Accessories

	MH V1-SCREWDRIVER	torque screwdriver (0.6 Nm)
	MH V1-BIT M12	plug-in cap M12
	MH V1-Holder	Modular universal holder for M12 connectors
	V1-CLIP	Unlocking protector for M12 connector
	V1-MARKING-RING-COLOR	Marking rings for M12 connectors, various colors
	V1/V3-LABELHOLDER	Label holder
	V1/V3-LABEL	Label plate
	MH V3-SCREWDRIVER	torque screwdriver (0.4 Nm)
	MH V3-BIT M8	plug-in cap for M8
	MH V3-Holder	Modular universal holder for M8 connectors

Release date: 2021-06-01 Date of issue: 2021-06-01 Filename: 221134_eng.pdf