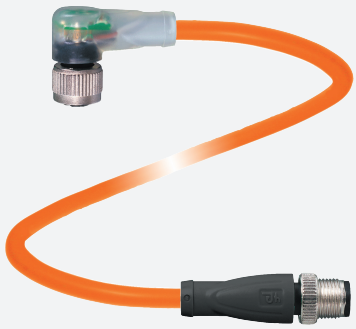

Connection cable

V1-W-E8W-OR1,5M-POC-V1-G

- Built-in LED, as operating and function indicator
- Welding-bead resistant
- Suitable for robotic applications / torsion resistant
- Degree of protection IP67 / IP68 / IP69
- Free of paint wetting interfering substances
- Ozone resistant
- Hydrolysis resistant
- Oil resistant
- Halogen-free
- Knurled nut suitable for tool assembly
- Immunity to vibration, with mechanical latching

Cordset M12 socket angled A-coded LED 4-pin to M12 plug straight A-coded 4-pin, POC cable welding-bead resistant orange, suitable for robotic applications, torsion resistant, oil resistant, molecularly cross-linked

Dimensions

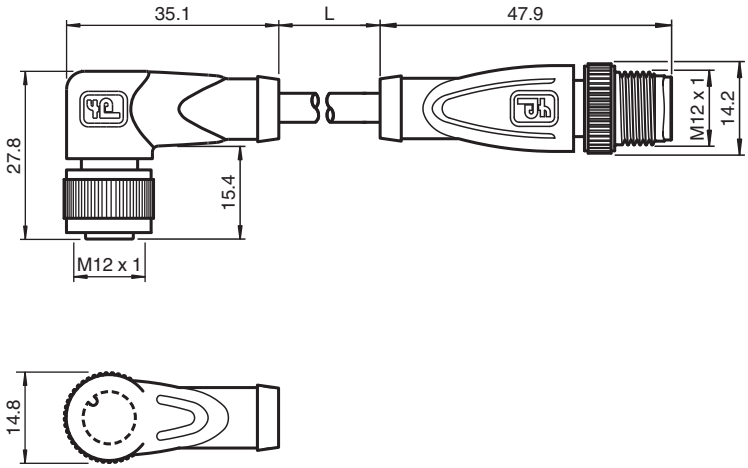

Technical Data

General specifications	
Connector 1	
Connection	socket
Construction type	M12
Style	angled
Locking	screw connection
Number of pins	4
Coding	A-coded
Connector 2	
Connection	plug
Construction type	M12
Style	straight
Locking	screw connection
Number of pins	4

Release date: 2021-07-13 Date of issue: 2021-07-13 Filename: 224709_eng.pdf

Technical Data

Coding		A-coded
Indicators/operating means		
LED green		Operating display
LED yellow		Functional display pin 4
LED white		Functional display pin 2
Electrical specifications		
Operating voltage	U_B	max. 24 V DC -20 % / +25 %
Operating current	I_B	max. 4 A
Conformity		
Degree of protection		EN 60529
Plug connection		connector M12 x 1 : IEC 61076-2-101
Flammability		IEC 60332-1-2 , ISO 14572 , ISO 6722
Halogen-free		IEC 60754-2
Hydrolysis resistance		ISO 6722
Oil resistance		ISO 14572
Ambient conditions		
Ambient temperature		
Plug connector		-40 ... 90 °C (-40 ... 194 °F)
Cable, fixed		-40 ... 120 °C (-40 ... 248 °F) for 20000 h -40 ... 150 °C (-40 ... 302 °F) for 3000 h
Cable, flexing		-15 ... 120 °C (5 ... 248 °F) for 20000 h -15 ... 150 °C (5 ... 302 °F) for 3000 h
Pollution degree		3
Mechanical specifications		
Plug connector		
Tightening torque		0.6 Nm
Loosening protection		available
Tool installation		straight knurling
Mating cycles		min. 100
Degree of protection		IP67 / IP68 / IP69
Cable		according to IEC/EN 60228 (DIN VDE 0295) class 5
Sheath diameter		4.8 mm
Bending radius		> 10 x cable diameter, moving > 10 x cable diameter, fixed
Sheath stripping force		max. 50 N / 300 mm
Sheath color		orange (similar to RAL 2003)
Number of cores		4
Core cross-section		0.34 mm^2
Cores color		Core 1: brown Core 2: white Core 3: blue Core 4: black
Core construction		19 x 0.16 mm Ø
Length	L	1.5 m
Cable code		Li 7Y 41X 4 x 0,34
Drag chain suitability		
Torsion cycles		min. 300000
Torsional stress		± 360 °/ 30 cm
Material		
PWIS free		yes
Halogen-free		yes
Plug connector		
Screw connection		Zinc diecast, nickel-plated
Body		TPU, transparent/black
Contact surface		Au

Release date: 2021-07-13 Date of issue: 2021-07-13 Filename: 224709_eng.pdf

Technical Data

Flammability	V-2
Cable	
Sheathing	POC
Core insulation	ETFE
Welding-bead resistance	yes
Weld spatter resistance	yes
Oil resistance	yes
Hydrolysis resistance	yes
Flammability	flame-resistant
Molecularly cross-linked	yes

Connection Assignment

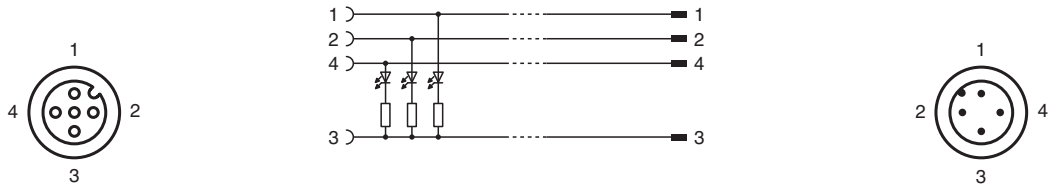

Accessories

	MH V1-SCREWDRIVER	torque screwdriver (0.6 Nm)
	MH V1-BIT M12	plug-in cap M12
	V1/V3-LABELHOLDER	Label holder
	V1/V3-LABEL	Label plate
	MH V1-Holder	Modular universal holder for M12 connectors
	V1-CLIP	Unlocking protector for M12 connector
	V1-MARKING-RING-COLOR	Marking rings for M12 connectors, various colors

Release date: 2021-07-13 Date of issue: 2021-07-13 Filename: 224709_eng.pdf