Wiring inserts with push-fit foot
For G13 twin lampholders 108773/108775
Material: PC, white
Push-in terminals: 0.5–1 mm²
Weight: 4.4 g, unit: 500 pcs.
Type: 22860/22861
Ref. No.: 545261 with stop
Ref. No.: 545262 without stop

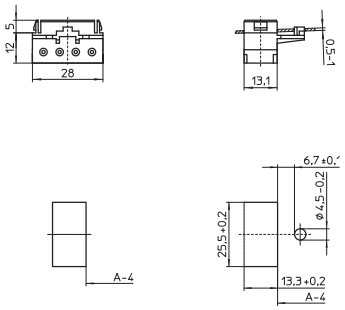

G13 Built-in Lampholders

For fluorescent lamps T8 (T26), T12 (T38)

Lampholders with integrated starter holder are equipped with big rotor and have push-in twin terminals for the lamp circuit and push-in terminals for the the starter circuit. Pin support for reliable contact (except for type 485)

Casing: PC, white, frontplate/rotor: PBT GF, white
Max. permitted temperature T_m on the rear side of the lampholder: 110 °C
T-Marking acc. to IEC

G13 built-in lampholders for lamps T8 and T12
Lampholder thickness: 13 mm
T140, nominal rating: 2/500
Push-in terminals: 0.5–1 mm²
Rear split pins for wall thickness up to 1.2 mm
Weight: 4.6/5.4 g, unit: 1000 pcs.
Type: 47105/47106
Ref. No.: 509152
Ref. No.: 509154 with spring adjustment

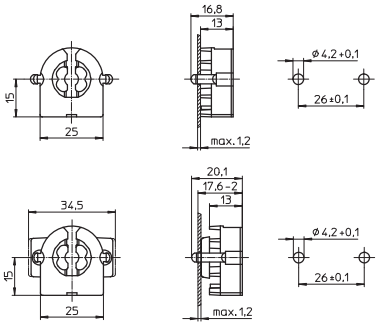

G13 built-in lampholders for lamps T8 and T12
Lampholder thickness: 9.5 mm
T140, nominal rating: 2/500
Push-in terminals: 0.5–1 mm²
Rear split pins for wall thickness up to 1.2 mm
Weight: 4.4/5.1 g, unit: 1000 pcs.
Type: 47505/47506
Ref. No.: 509162
Ref. No.: 509164 with spring adjustment

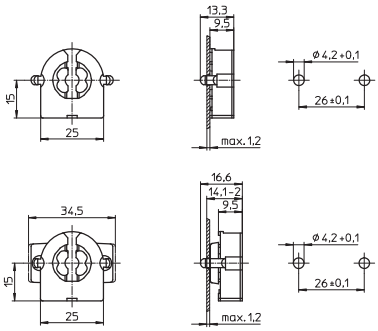
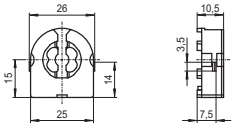
G13 built-in lampholder for lamps T8 and T12
Lampholder thickness: 10.5 mm
T140, nominal rating: 2/500
Push-in terminals: 0.5–1 mm²
Weight: 4.6 g, unit: 1000 pcs.
Type: 47304
Ref. No.: 509156